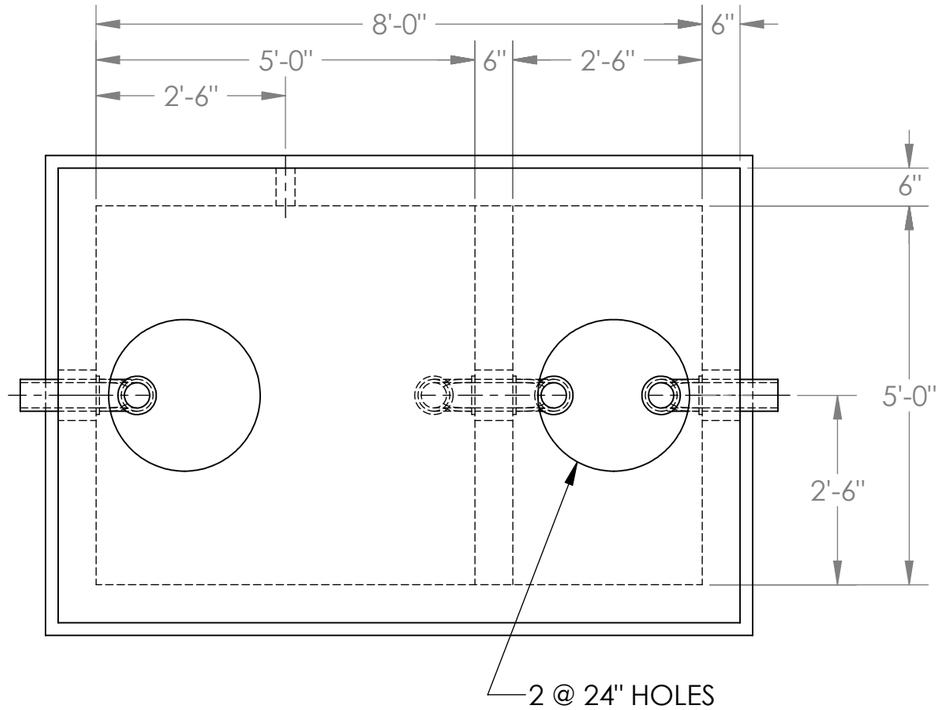

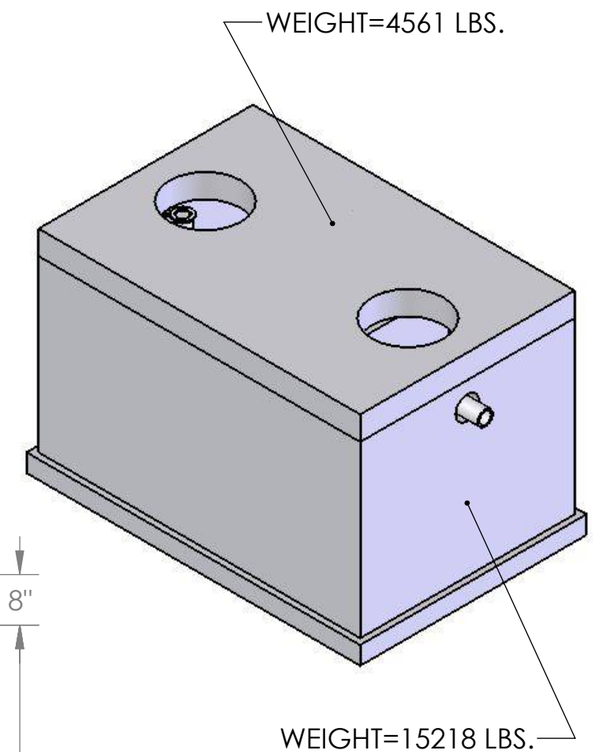

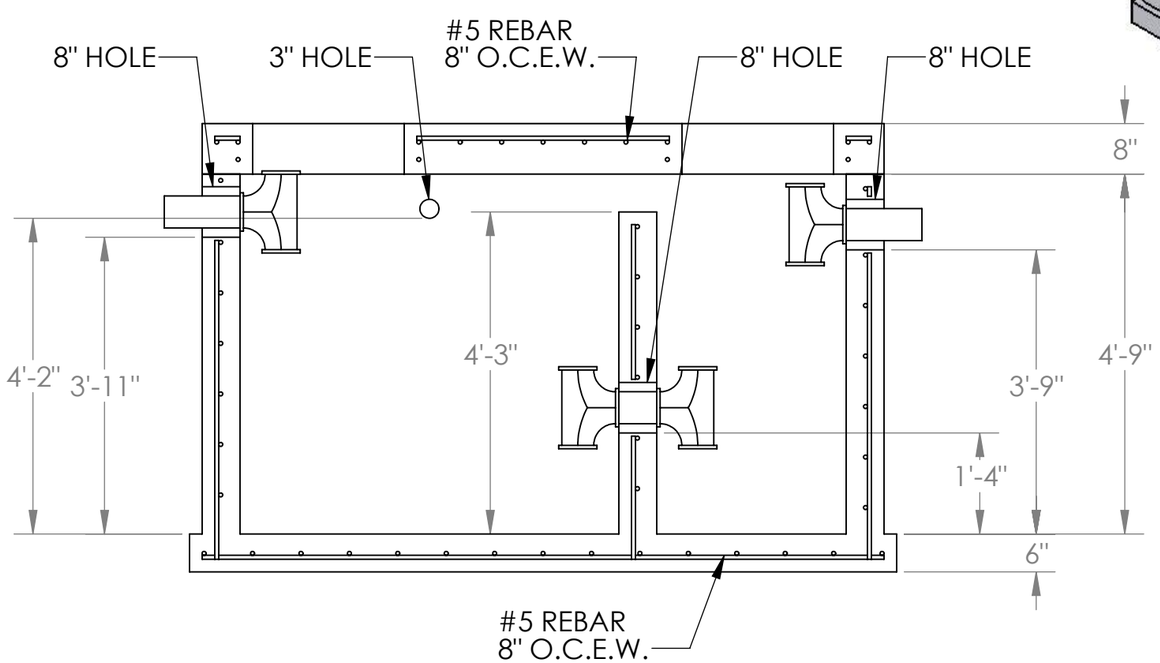

FOR ALL YOUR STORM & SANITARY NEEDS

COASTAL PRECAST of Florida

PH: (239)482-7468
FX: (239)482-7469

P.O. BOX 370
ESTERO, FL. 33928

NOTES

CONCRETE SPECS
4,000 PSI @ 28 DAYS
TYPE II CEMENT
REINF. REF. FDOT INDEX 200, 201

RING & COVER
U.S.F. 170-E

STANDARDS
6" WALLS
6" BASE
8" TOP
#5 REBAR SPACED 8" O.C.

PVC FITTING NOT INCLUDED

OPTIONAL BOOTS FOR OUTER HOLES

GREASE TRAP 1000 GALLON